SYSTEM WIRING DIAGRAMS
Rear Wiper/Washer Circuit
1997 Saab 9000
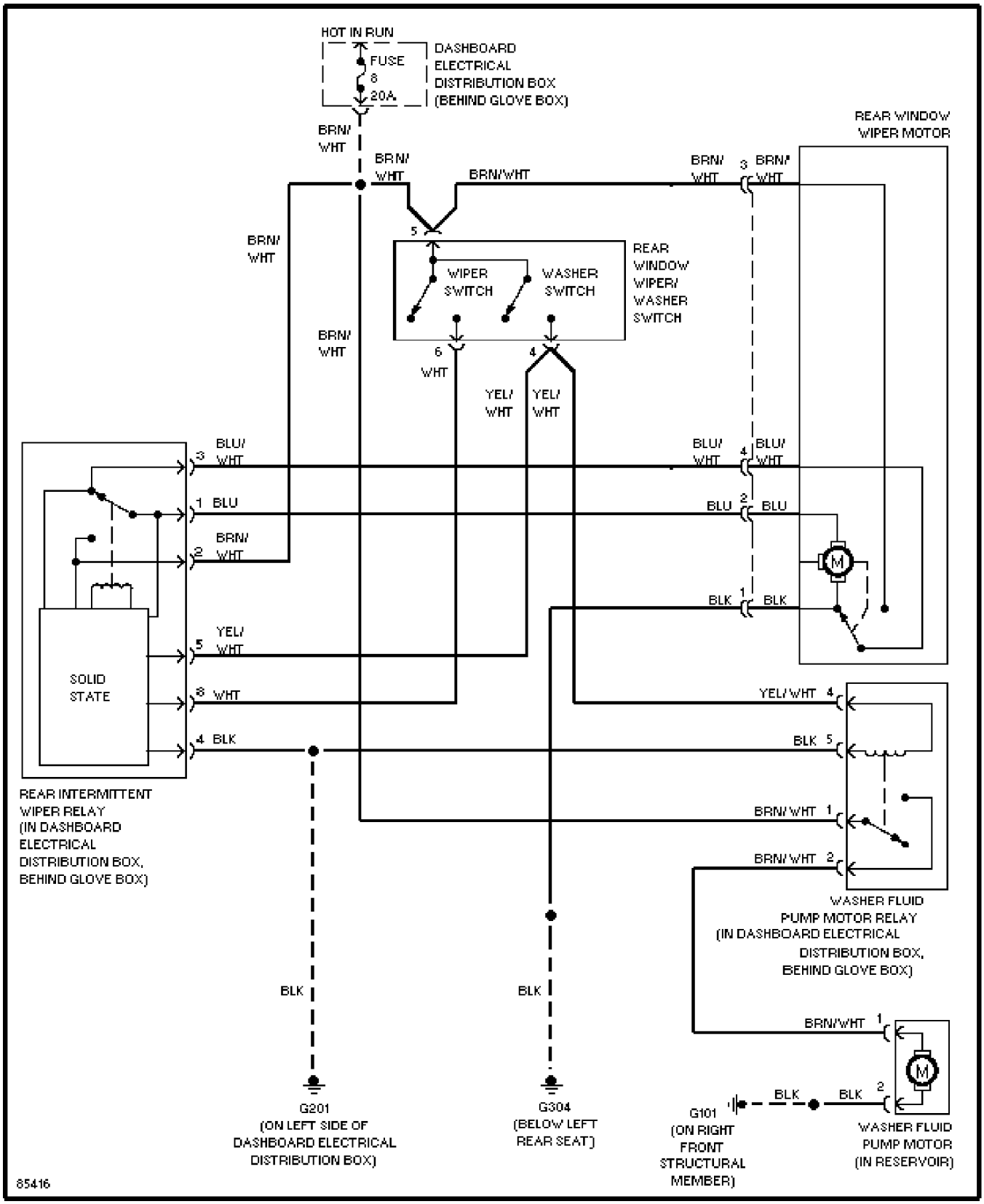
For DIAKOM-AUTO http://www.diakom.ru Taganrog support@diakom.ru (8634)315187
Copyright © 1998 Mitchell Repair Information Company, LLC
Friday, December 15, 2000 02:25PM